Meridian 1

Option 11C and 11C Mini

Customer Configuration Backup and Restore Guide

Document Number: 553-3011-330
Document Release: Standard 6.00
Date: April 2000

Printed in Canada

Revision history

April 2000

Standard 6.00. This is a global document and is up-issued for X11 Release 25.0x.

October 1997

Issue 5.10, Standard

July 1996

Issue 5.0, Standard

December 1995

Issue 4.0, Standard

July 1995

Issue 3.0, Standard.

December 1994

Issue 2.0, Standard.

December 1992

Issue 1.0, Standard.

Contents

About this guide

This document is a global document. Contact your system supplier or your Nortel Networks representative to verify that the hardware and software described is supported in your area.

The *Customer Configuration Backup and Restore Guide* describes the Customer Configuration Backup and Restore (CCBR) feature for the Option 11C and 11C Mini systems.

This guide contains information about computer equipment requirements. It includes instructions on how to operate and use the feature from a remote location and on-site.

> ***Note:*** In this guide, the term “Option 11C system” refers to the Option 11C and Option 11C Mini unless specifically stated.

“System Controller cards” refers to the Core System Controller, Small System Controller (SSC), and Mini System Controller (MSC) cards.

Overview

Introduction

This chapter provides a general overview of the Customer Configuration Backup and Restore (CCBR) feature. It describes the operations CCBR performs and the various components that are part of this feature.

Overview

The CCBR feature provides you with the ability to store the configuration database of Option 11C system on a floppy disk or hard drive using a personal computer (such as an IBM-type PC or a Macintosh computer).

The stored information is used to restore the Option 11C system configuration database in the unlikely event of a system failure, or to update the configuration database on an existing Option 11C system.

File transfer time

Depending on the number of records in the Option 11C system configuration database, it can take over 30 minutes to back-up or restore data at a rate of 1200 baud.

> ***Note:*** The number of records in an Option 11C system is displayed when performing a data dump (EDD) using LD 43.

The approximate time required to transfer the data can be calculated as follows:
At 1200 bps, time to transfer = ([Number of records X 1024] + 1132) ÷ 90.

> ***Note:*** If a second SDI port on the Option 11C system is performing maintenance operations, the time required to transfer data may be significantly increased.

Operations performed

You can perform the following operations either remotely or on-site:

- Back up the configuration database of one or more Option 11C systems to a hard disk or to a floppy disk.
- Restore the configuration database after a system failure, using the information previously stored on disk.
- Bypass the login procedure on a Option 11C system that is in continuous SYSLOAD or INI mode.
- Install a configuration database in a new Option 11C system.

Procedures for performing these operations are described in “How to use this feature” on page 25.

Configuration database storage system

The Option 11C system configuration database is stored on the Primary Flash ROM located on the NTDK20 Small System Controller card or the Option 11C Mini NTDK97 Mini System Controller card. A second Flash ROM, also located on the SSC/MSC serves as a Backup Flash ROM for the information contained on the Primary Flash ROM.

The Option 11C system configuration database can be copied from RAM to the SSC or MSC Flash ROMs by performing a data dump (EDD). Use overlay program 43 (LD 43) to perform a data dump (EDD). With the CCBR feature, the configuration database can be copied (backed up) from the SSC/MSC Flash ROM to a computer's hard disk or floppy disk. Service is not interrupted while performing an EDD or a backup procedure.

The Option 11C system automatically backs up the configuration database when the midnight routines run. Backups done during the midnight routines write only to the Backup Flash ROM.

Security and the re-load (SYSLOAD) process

Before the Option 11C system loads data from either of the Flash ROMs, it performs a security check to make sure that the Incremental Software Management (ISM) parameters have not been changed. If the security check fails, the Option 11C still loads but will not operate (calls will not be processed) until the problem is corrected using LD 97. Security check failure is indicated by a sysload message (SYS4342, SYS4393 or SYS4399). Refer to the *X11 Administration* (553-3001-311) for a description of LD 97 and ISM parameters, and to the *X11 System Messages Guide* (553-3001-411) for a description of SYS messages.

Equipment requirements

Remote computer access

Computer access to the Option 11C system is established by connecting SDI port 0, 1, or 2, located on the System Controller cards (NTBK45, NTDK20, or NTDK97), to a dial-up line through an on-site modem. This allows the computer to dial directly into the Option 11C from a remote location.

On-site computer access

A computer can be connected on-site to the Option 11C system by connecting a computer directly to SDI port 0, 1, or 2 on the System Controller card.

Note: A modem is only needed when remote access is a requirement.

Major components

The major components consist of the following:

- a computer that supports XModem CRC communications protocol
- modems for accessing the Option 11C system from a remote location
- telephone line for accessing the Option 11C system from a remote location
- NTBK48 3-port cable to connect the modem or computer to the SDI port
- modem eliminator when connecting a computer on-site directly to the Option 11C

  Note: Two modem eliminators are normally supplied with the Option 11C system. One is equipped with a female-to-female connector; the other is equipped with a female-to-male connector.

Figure 1 shows the various components required to access the Option 11C system remotely with a computer.

Figure 1
CCBR feature — Components for remote access

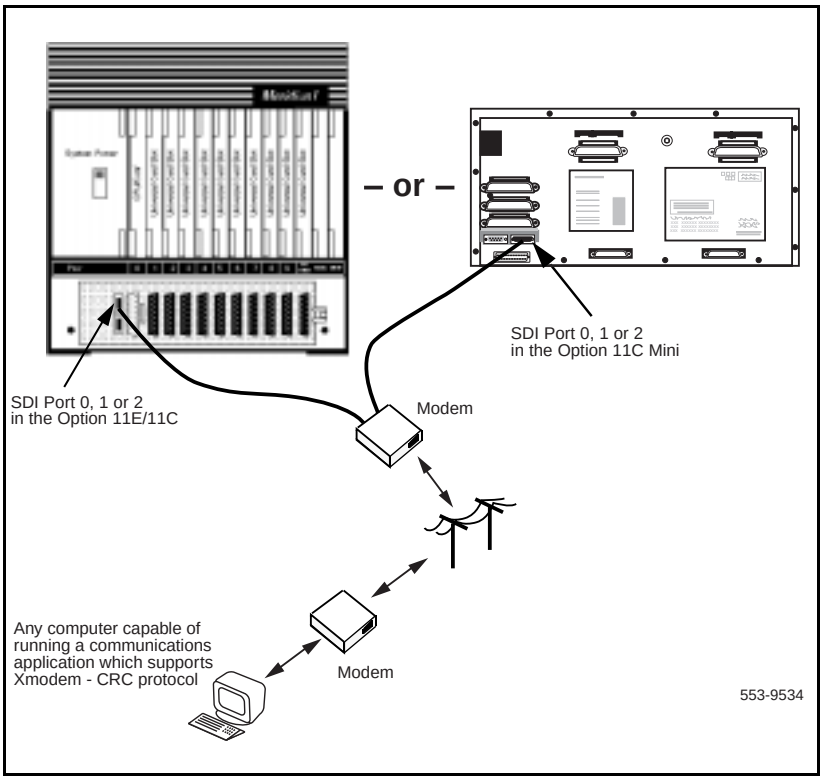

Compatible modems and protocols

Most modems capable of supporting XModem CRC protocol can be used with this feature. The protocol specifications are given in “Protocol specifications” on page 51. The information is intended to assist those who wish to create a personal communications software package that is compatible with the protocols used by the SDI port in the Option 11C system.

Compatible communications software

The CCBR feature is designed to operate with most communications software packages that support XModem CRC file transfer protocol. Refer to “Protocol specifications” on page 51 for more information.

> ***Note:*** Ensure that your communications package complies to the protocol specifications outlined in “Protocol specifications” on page 51. Not all XModem CRC protocols are identical. Some may not operate properly with the CCBR feature.

Set up procedures

Introduction

This chapter describes how to set up the equipment needed at the Option 11C system site to use the Customer Configuration Backup and Restore (CCBR) feature.

How to prepare the SDI port and modem

SDI port

Note: A modem is only needed when remote computer access to the Option 11C system is a requirement.

There are several circuit cards that provide SDI port connections in the Option 11C system. However, only SDI port 0, 1, or 2, located on the System Controller cards, can be used to access the Option 11C system for the Configuration Data Backup and Restore feature.

SDI port settings on the System Controller cards

Table 1
SDI port settings

TTY Number	Port	DTE	DCE	RS232	RS422	Use	Configuration (see Note)
0	0	Yes	No	Yes	No	MTC/SCH/BUG	9600/8/1/NONE
1	1	Yes	No	Yes	No	MTC/SCH/BUG	9600/8/1/NONE
2	2	Yes	No	Yes	No	CTY	9600/8/1/NONE
Note: Any baud rate up to 9600 baud is supported.							

Cable connections and adapters

An NTBK48 three-port 9 to 25 pin converter cable is supplied with the Option 11C system. The cable can be used to connect SDI port 0, 1 or 2, directly to most types of modems. However, some modems may require a connector adapter to make the connection. For more information, refer to the modem manufacturer's instructions provided with the modem.

The signals carried by each lead in the NTBK48 3-port cable are shown in Figures 2 and 3.

Figure 2
NTBK48 Port 0 Signal Leads

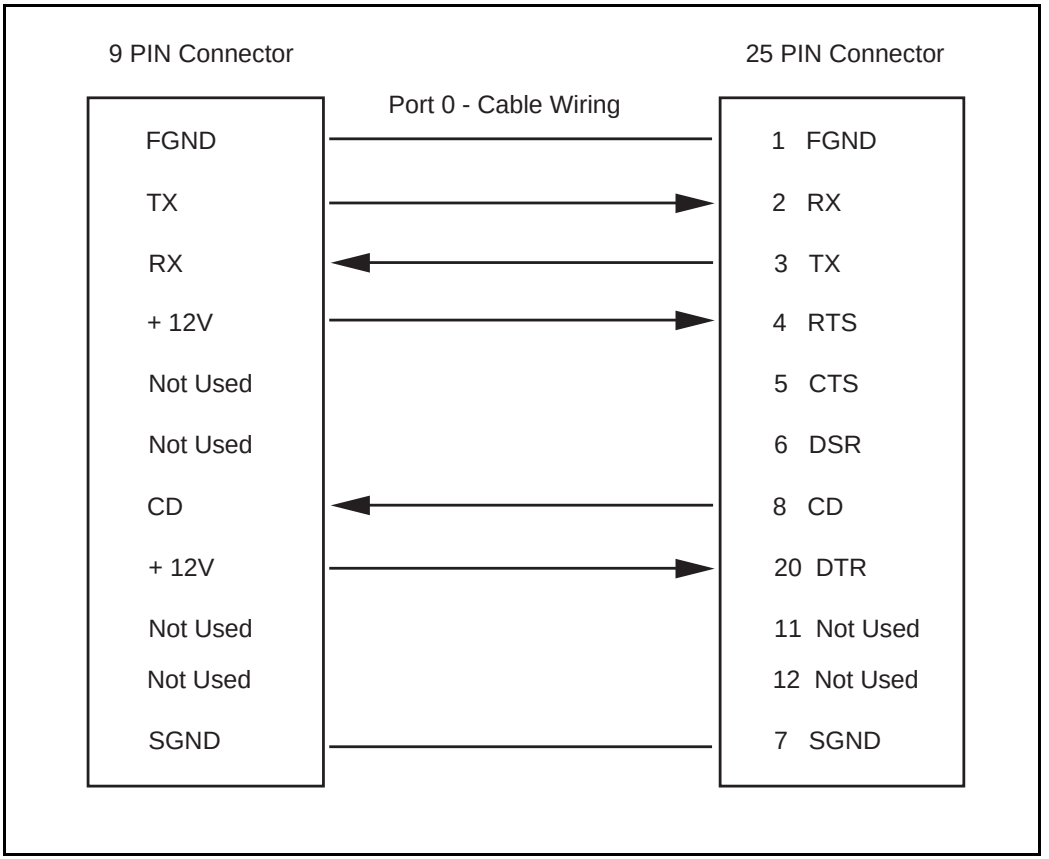

Figure 3
NTBK48 Ports 1 and 2 Signal Leads

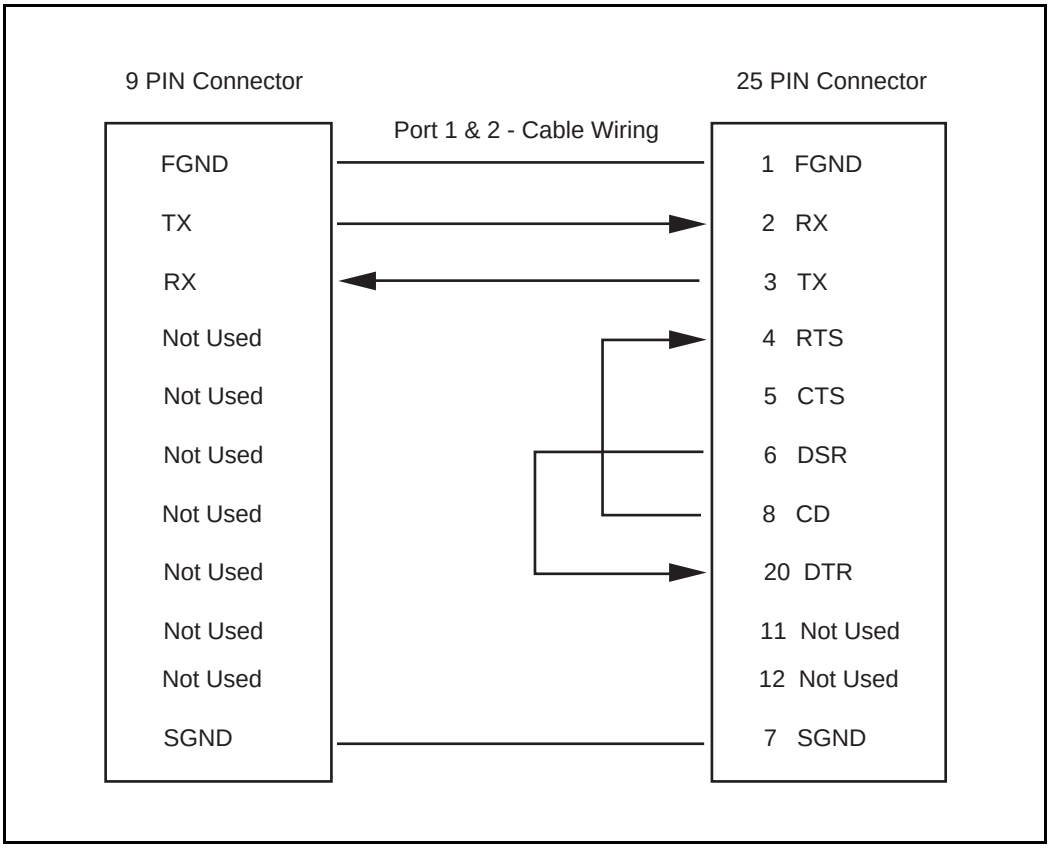

A modem eliminator is required when a computer is connected on-site. Two are supplied with the Option 11C system. One is equipped with a female-to-female connector; the other is equipped with a female-to-male connector. Refer to the manufacturer's instructions provided with your computer to determine which type is required.

Figure 4 shows the modem eliminator's internal connections and lead designations.

Figure 4
Modem eliminator connections and designations

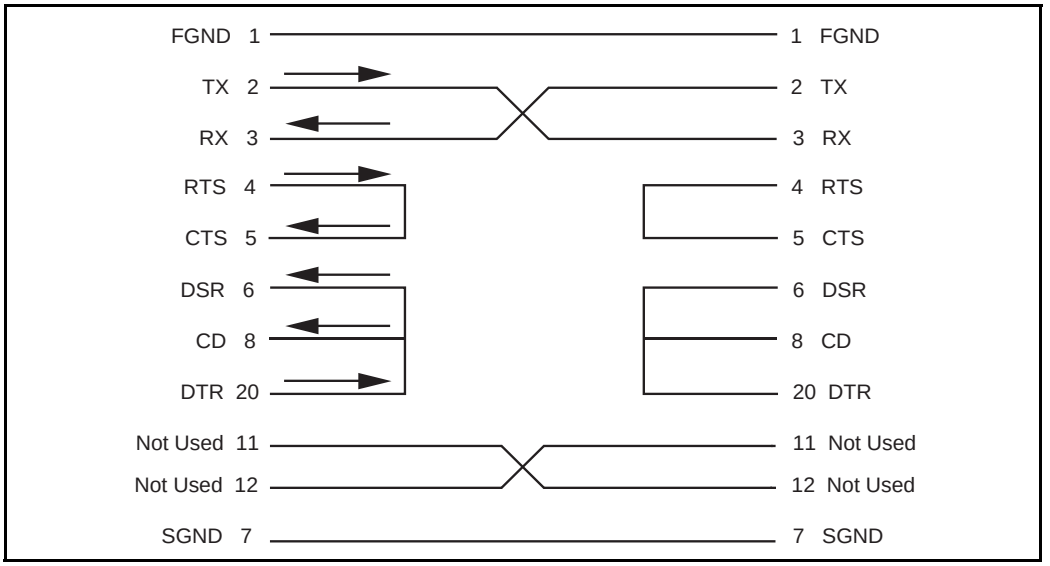

Modem

Settings

Modems connected to an Option 11C system should be set as follows:

- CD (Carrier Detect): Active if carrier detected on incoming call
- CTS (Clear to Send): Normal operation or forced active
- Hardware and software disabled flow control

The SDI port on Option 11C will be disabled if a device connected to it generates excessive erroneous (garbage) characters. To prevent the port from being disabled due to garbage, modems connected to it should be set to the “dumb” mode. Setting the modem to “dumb” mode results in the following modem functions being disabled:

— Loopback

— Auto Echo

— Self Test

Refer to the manufacturer's instructions provided with the modem for information about how to alter the settings.

Installing and connecting the SDI port and modem

The CCBR feature uses SDI port 0, 1 or 2, located on the System Controller card in the main cabinet.

Procedure 1 on page 22 describes how to connect a modem to SDI port 0, 1, or 2 at the Option 11C system when remote computer access is a requirement. Refer to the computer manufacturer's instructions for connecting the computer to a modem.

> ***Note:*** Refer to “How to use this feature” on page 25 for information about on-site computer access to the Option 11C system.

Installation procedure

See Figures 5 and and Procedure 1 on page 22 for installation instructions.

Figure 5
Installing the modem for a Option 11C

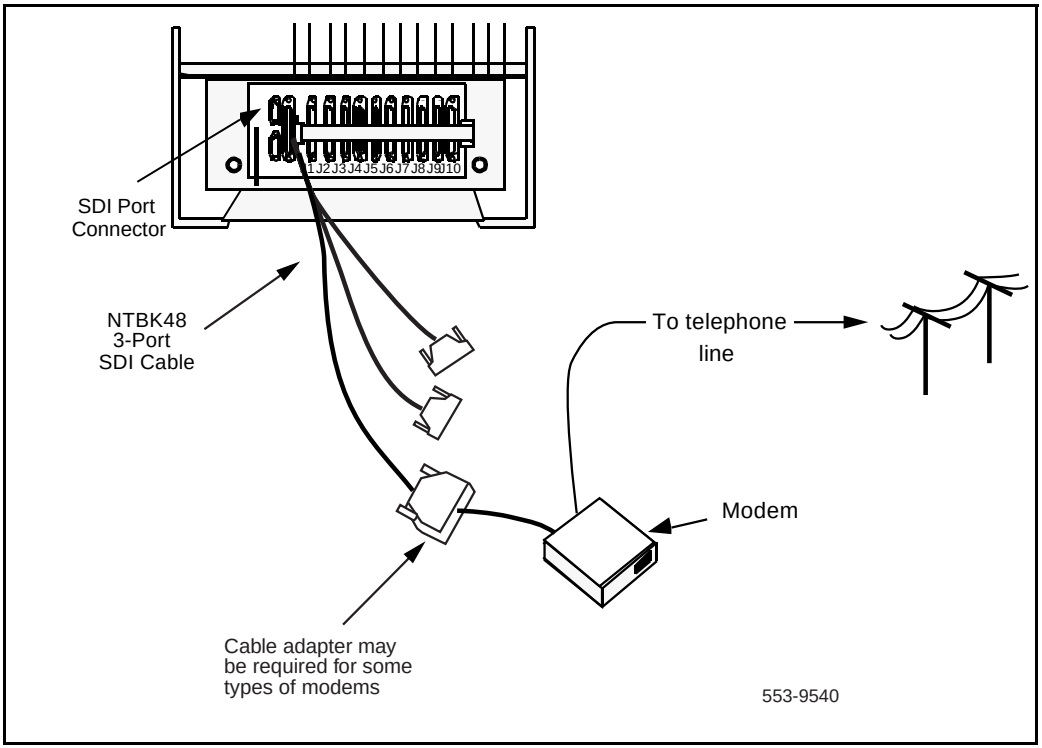

Figure 6
Installing a modem for an Option 11C Mini

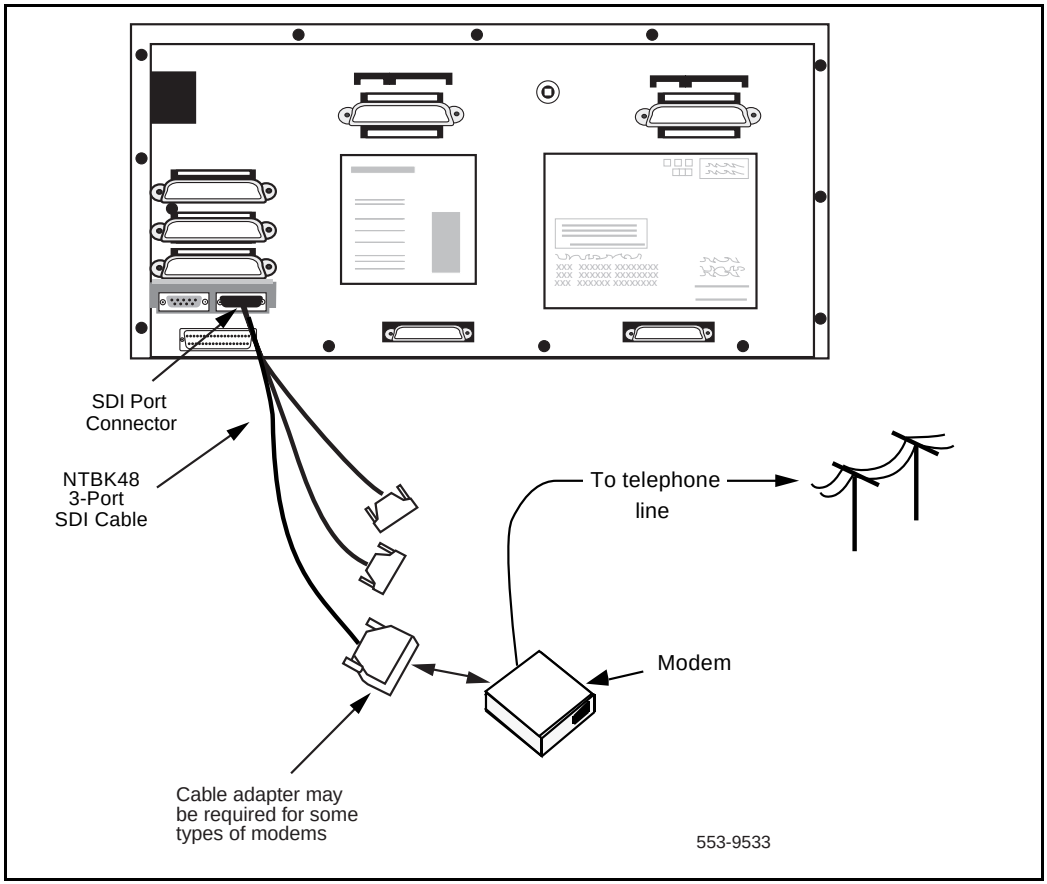

Procedure 1
Installing the SDI port and modem

Refer to Figures 5 and while following the steps in this procedure.

1 **Connect an NTBK48 3-Port SDI cable to the connector associated with the System Controller card.**

See Figure 5 for the location of the SDI connector on the Option 11C Main Cabinet.

See Figure for the location of the SDI connector on the Option 11C Mini Main Chassis.

2 **If Port 0 is used, check the baud rate setting on the front of the System Controller card located in slot 0 of the main cabinet/chassis.**
If Port 1 or 2 is used, the baud rate is configured in the system software (LD 17).

Make sure that the rate is compatible with the modem.

3 **Check the modem settings and make sure they are correct.**

The modem settings are described earlier in this chapter. Refer to the instructions supplied with the modem to implement the settings.

4 **Connect one of the three ends of the cable to the modem.**

Note: The CCBR feature works on all ports.

A cable adapter may be required depending on the type of modem being installed. Refer to the instructions supplied with the modem.

5 **Connect the modem to a working telephone line.**

A telephone line cord is normally supplied with the modem. Some modems are equipped with two identical jacks (one for the telephone line and one for an optional telephone set). When connecting the line cord, make sure that it is in the correct jack on the modem.

Make note of the telephone number assigned to the modem (telephone line).

6 Test the modem for proper operation once you have started up the Option 11C system.

Call the telephone number assigned to the modem. The modem should respond.

The Option 11C system can now be accessed from a remote location by a computer equipped with a modem.

Note: The settings for the computer communications software package and associated modem are described earlier in this chapter. Follow the instructions supplied with the computer and its modem for setup implementation.

——————————— ***End of Procedure*** ———————————

How to use this feature

Introduction

This chapter describes how to perform the various operations provided by the Customer Configuration Backup and Restore (CCBR) feature. It describes how to:

- access an Option 11C system remotely (Procedure 2 on page 26)
- access an Option 11C system on-site (Procedure 3 on page 29)
- back up the configuration database (Procedure 4 on page 31)
- restore or update the configuration database on an operating Option 11C system (Procedure 5 on page 37)
- restore or update the configuration database on a non-operating Option 11C system (Procedure 6 on page 44).

Operating procedures

Procedures 2, 3, 4, 5, and 6 describe how to use the CCBR feature.

How to access an Option 11C system remotely

Procedure 2 describes how to access an Option 11C system from a remote location.

Procedure 2
Accessing remotely

1 Open the communications package on the computer.

Use XModem CRC file transfer mode.

Make sure that the parameters in the communications package you are using are properly set. Refer to the instructions provided with your computer for information regarding parameter settings. Some of the parameters may be preset. All values must be set as follows to ensure proper operation:

8 Bits, 1 Stop, No Parity, Full Duplex, bps (See Note).

No Strip, Block Size 128 bytes

Note: The baud rate (bps) depends on the type of modem used and should correspond to the settings at the Option 11C system. The only settings that can be used are 300 bps, 600 bps, 1200 bps, 2400 bps, 4800 bps, 9600 bps and 19200 bps.

2 From the communications package on the computer, dial the telephone number assigned to the Option 11C system modem.

The modem will answer the call and connect to SDI port 0, 1, or 2 on the Option 11C system.

3 Press the Carriage Return, <CR>, key.

The Option 11C displays its present activity.

Example:

OVL111 44 IDLE

4 **Set the Caps Lock key on your keyboard to the caps lock setting.**

Type LOGI and press the <CR> key.

The Option 11C system responds with **PASS?**

Example:

```
LOGI
PASS?
```

5 **Type the four-digit password assigned to the Option 11C system accessed and press the <CR> key.**

The Option 11C system responds with a period (.) and a caret (>).

Example:

```
.
>
```

6 **The Option 11C is accessed and is ready to continue.**

Refer to the appropriate procedure in this chapter for the operation being performed and continue.

——————————— ***End of Procedure*** ———————————

How to access an Option 11C system on-site

Procedure 3 describes how to access an Option 11C system on-site.

Figures 7 and 8 show the on-site connections.

Figure 7
Option 11C site connections

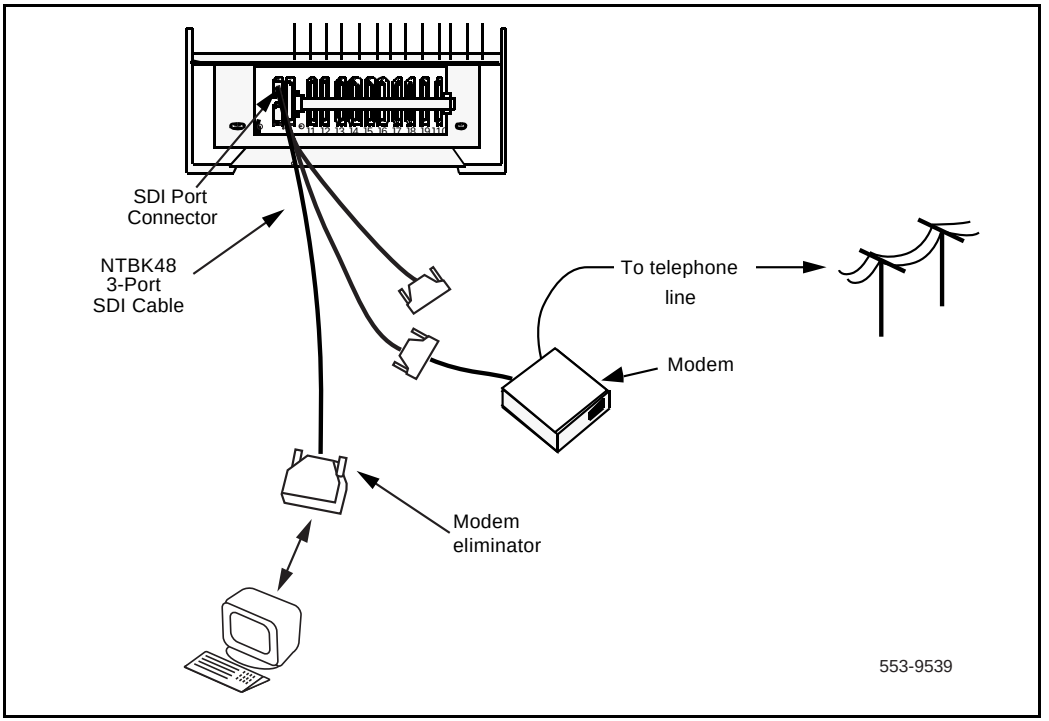

Figure 8
Option 11C Mini site connections

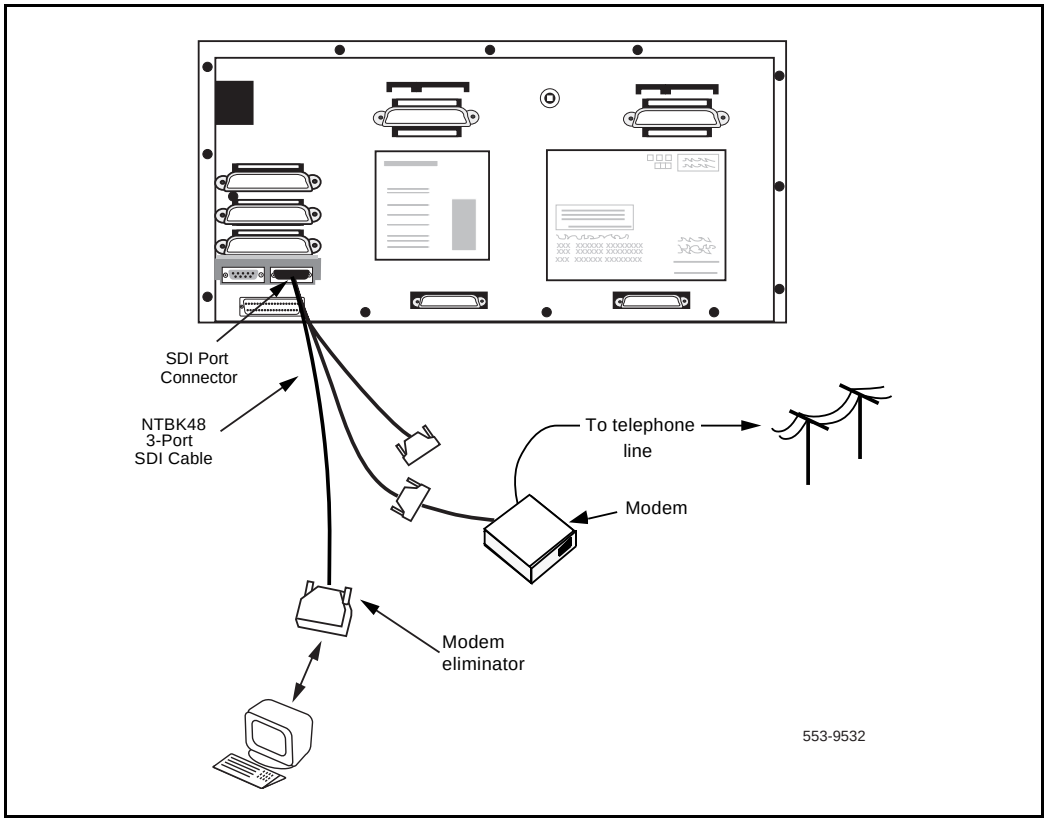

Procedure 3
Accessing from on-site

Refer to Figures 7 and 8 while performing this procedure.

1 Connect the computer to one of the three ports on the NTBK48 SDI cable.

A modem eliminator compatible with the computer is required on the cable. Refer to the instructions supplied with the computer for information about modem eliminators.

2 Open the communications package on the computer.

Use XModem CRC file transfer mode.

Make sure that the parameters in the communications package you are using are properly set. Refer to the instructions provided with your computer for information regarding parameter settings. Some of the parameters may be preset. All values must be set as follows to ensure proper operation:

8 Bits, 1 Stop, No Parity, Full Duplex, bps. (See Note)
No Strip, Block Size 128 bytes

Note: The baud rate (bps) depends on the type of modem used and should correspond to the settings at the Option 11C system. The only settings that can be used are 300 bps, 600 bps, 1200 bps, 2400 bps, 4800 bps, 9600 bps and 19200 bps.

3 Press the Carriage Return, <CR>, key.

The Option 11C system displays its present activity.

Example:
OVL111 44 IDLE
TTY 00 SCH MTC BUG 23:18

4 Set the Caps Lock key on your keyboard to the caps lock setting.

Type LOGI and press the <CR> key.

The Option 11C system responds with **PASS?**
Example:
LOGI
PASS?

5 Type the four-digit password assigned to the Option 11C system accessed and press the <CR> key.

The Option 11C system responds with a period (.) and a caret (>).

Example:
.
>

6 The Option 11C system is accessed and is ready to continue.

Refer to the appropriate procedure in this chapter and continue.

End of Procedure

How to backup the configuration database

Procedure 4 describes how to copy the configuration database from the System Controller card Flash ROM of the Option 11C system to a computer disk.

Procedure 4
Backing-up the configuration database

1 Access the Option 11C system and log in.

See “Accessing remotely” on page 26 or “Accessing from on-site” on page 29.

2 Load overlay program 43. Type LD 43 and press the <CR> key.

The Option 11C system responds with EDD followed by a period (.).

Example:
EDD000
.

CAUTION

During the completion of a command in overlay 43, the system will produce the percentage symbol (%) approximately every two seconds. This symbol indicates that the command is still in-progress. To avoid the potential corruption of data, do not attempt to interrupt power, initialize the system, or abort the overlay until it has fully completed processing the command

3 Type EDD and press the <CR> key to perform a data dump.

CAUTION

It is extremely important that this step be completed.
Its purpose is to make sure that the latest configuration database, including recent service changes, is copied from the system main memory (RAM) to the Primary Flash ROM, Backup Flash ROM and PCMCIA card (if one is present).

4 Wait for the Option 11C system to complete the data dump.

It takes approximately five minutes to complete a data dump. Once the data dump is completed, the Option 11C system responds with:

DATABASE BACKUP COMPLETE

The following is an example of what may be displayed on the screen during the data dump. (During the data dump, the percentage symbol, “%”, is displayed approximately every 2 seconds. This indicates that the EDD command is still being processed.)

```
EDD TO SYST CORE
%%%%%%%%%%%%%%%%%%%%%
%%%

DIRECTORY
CONFIG

.
.
.
CHECKING
RECORD COUNT = 43

EDD TO CARTR.
%%%%%%%%%%%%%%%%%%%%%
%%%

DATABASE BACKUP COMPLETE
```

Note: Review Steps 5 through 8 before proceeding. If they are not completed within approximately 5 minutes after the XBK command is entered, the system will time out.

5 Exit the overlay.

Type four asterisks, “********” to exit overlay program 43.
Load overlay program 143. Type LD 143 and press the <CR> key.
Wait for overlay program 143 to load, then proceed to Step 6.

The remaining commands in this procedure are invoked using overlay program 143 (LD 143).

6 Enter the text that will appear as a header on this data file.

The INFO: prompt allows the entry of up to 128 characters of text (including spaces, carriage returns, and line feeds). The text entered is added to the configuration database and serves as a header for the file.

Note: If more than 128 characters are entered, the Option 11C system will exit the text entry mode and, after a few seconds, respond with R> as described in the next step. If you do not wish to enter any text, press the <CR> key twice as described in Step 7.

The following is an example of what may be displayed on the screen:

```
.XBK

INFO:
CONFIGURATION DATA FROM YOUR OPTION 11C SYSTEM
JULY 7/92
```

7 When all the text is entered, press the <CR> key twice.

After a few seconds the Option 11C responds with **R>** indicating that it is ready to continue.

The following is an example of what may be displayed on the screen:

```
.XBK

INFO:
CONFIGURATION DATA FROM YOUR OPTION 11C SYSTEM
JULY 7/92


R>
```

Note: The next step must be completed within 2 minutes or the system will time out. If a time-out occurs, return to Step 6 and type the XBK command.

8 **Using the communications software on the computer, receive the configuration database file using XModem CRC protocol. The file received will be in binary format.**

Refer to the manual supplied with the communications software package provided for the computer for information about receiving files.

The file is transferred and stored on the computer's hard disk or on floppy disk.

9 **Wait for the file transfer operation to complete.**

File transfer may take up to 30 minutes to complete (depending on the baud rate).
When successfully completed, the Option 11C system responds with OK.

If the file transfer fails, the Option 11C system responds with one of the following:

BKP003
Indicates that the Flash ROM in use contains invalid data and data transfer will not be attempted.

Corrective Action:

— Do an EDD to update the flash ROM in use.

— Repeat the backup procedure using the XBK command.

BKP008
The BKP008 message indicates that the data transfer procedure was interrupted by the Option 11C system (timed out) or by a problem on the telephone line (such as excessive noise).

Corrective Action:

— Repeat the backup procedure.

10 **Type XVR and press the <CR> key. Wait for the Option 11C system to respond with the R> prompt.**

The **XVR** command is used to verify the backed-up data file. It sends the backed-up file back to the Option 11C system and compares it with the configuration data stored in the Option 11C system. This ensures the integrity of the backed-up data file.

11 With the communications software on the computer, send the backed-up data file using XModem CRC protocol to the Option 11C system for a comparison.

Refer to the manual supplied with the communications software package provided for the computer for information about sending files.

The Option 11C system displays the character **C** every 3 seconds until the file is sent. The file must be sent before the character **C** is displayed 20 times (approximately 1 minute) to avoid an Option 11C system time-out.

The following is an example of what may be displayed on the screen:

```
.XVR
R>
CCCCCCCCCC
```

When the file is successfully verified, the Option 11C system responds with **OK**.

If the file verification fails, the Option 11C system responds with one of the following:

BKP002
Indicates a mismatch in the data file.

Corrective Action

— Compare the file again with the XVR command.

— If the verification fails again, repeat the backup and then re-verify using the XVR command.

- Check your communications package parameters. Make sure that the parameters, such as Mode (should be set to BINARY) or Protocol (should be set to XModem), are correctly set. Another possible cause is that the communications package is stripping characters.

BKP003
Indicates that the Flash ROM in use contains invalid data and data transfer will not be attempted.

Corrective Action

— Do an EDD to update the flash ROM in use.

— Repeat the verification procedure.

BKP008
Indicates that a transmission error occurred. The procedure may have timed-out or there was a problem on the telephone line such as excessive noise.

Corrective Action

— Repeat the verification procedure.

12 The configuration database backup procedure is completed.

Type four asterisks "********" to exit the overlay program. Log out of the Option 11C system by typing **LOGO**.

——————————— ***End of Procedure*** ———————————

How to restore or update the configuration database on an operating Option 11C system

Procedure 5 describes how to transfer the configuration database from a computer disk to an operating Option 11C system.

Procedure 5
Restoring or updating database (system operating)

1 Access the Option 11C system and log in.

See “Accessing remotely” on page 26 or “Accessing from on-site” on page 29.

2 Option 11C system
Type LD 143 and press the <CR> key.
Wait for overlay program 143 to load.

With Option 11C systems, the database can also be restored or updated using the Software Installation Program. For details, refer to the *Upgrade Procedures Guide*.

3 Type XRT and press the <CR> key to begin the configuration database restore procedure.

The Option 11C system prepares to receive the configuration database file from the computer and restores it onto the System Controller card.

The Option 11C system responds with WAIT - - 2 MINUTES followed by R>.

Example:
.XRT

WAIT - - 2 MINUTES

R>

CAUTION

The Flash ROM is erased at the start of this step. If a problem occurs during the restore procedure, DO NOT leave the in this state. Repeat the restore procedure. If problems are still encountered, type the EDD command in LD 43 to data dump the current data from the Option 11C memory (RAM) to the Flash ROM.

4 With the communications software on the computer, send the backed-up data file using XModem CRC protocol to the Option 11C system.

Refer to the manual supplied with the communications software package for information about sending files.

The Option 11C system displays the character **C** every 3 seconds until the file is sent. The file must be sent before the character **C** is displayed 20 times (approximately 1 minute) to avoid a Option 11C system time-out.

CAUTION

The System Controller Flash ROM on the System Controller card is erased at the first stage of this step. If a time-out or other problem occurs during the restore procedure, **DO NOT** leave the Option 11C system in this state. Repeat the restore procedure. If problems are still encountered, type the **EDD** command in LD 43 to data dump the current data from memory (RAM) to the System Controller card Flash ROM.

The data is copied from the computer to the System Controller Flash ROM. The Option 11C system site ID contained on the software cartridge on the System Controller card is checked against the ID contained in the configuration database record being sent. If the IDs do not match, the data will still be restored and the Option 11C system will operate but the following message will appear.

BKP011
Indicates that the Site ID in the customer data being restored does not

match that of the Option 11C system data stored on the System Controller card.

Note: The procedure completes normally. This message is only a warning.

Corrective Action

If using this feature as an install tool, this message is normal and does not indicate an error condition. The site ID will be automatically corrected on the next data dump (EDD) and backup.

Check the customer data file to ensure it is the correct one. You may inadvertently be restoring the wrong date file to the Option 11C system. If the data file is the correct one, contact Nortel Networks technical support.

When the file is successfully restored on the Flash ROM, the Option 11C system responds with **OK**.

If the file restore fails, the Option 11C system responds with one of the following:

BKP004
Indicates a failure to erase the System Controller Flash ROM.

Corrective Action

— Repeat the Restore procedure.

— If it fails again, a faulty Flash ROM is the probable cause. Replace the System Controller card.

BKP003

Indicates that the Flash ROM in use contains invalid data and the procedure failed.

Corrective Action

— Check the customer data file being transmitted to ensure that it is the correct one.

— Repeat the Restore procedure using the XRT command. If it still fails, then a corrupted customer data file is a probability.

BKP008
Indicates that a transmission error occurred. The procedure may have timed-out or there was a problem on the telephone line such as excessive noise.

Corrective Action

— Repeat the procedure.

5 Type XVR and press the <CR> key. Wait for the Option 11C system to respond with the R> prompt.

The **XVR** command is used to verify the data file sent to the Option 11C system by comparing it with the one in the computer.

6 With the communications software on the computer, send the backed-up data file using XModem CRC protocol to the Option 11C for a comparison.

Refer to the manual supplied with the communications software package provided for the computer for information about sending files.

The Option 11C system displays the character **C** every 3 seconds until the file is sent. The file must be sent before the character **C** is displayed 20 times (approximately 1 minute) to avoid an Option 11C system time-out.

The following is an example of what may be displayed on the screen:

```
.XVR

R>
CCCCCCCCCC
```

When the file is successfully verified, the Option 11C systemresponds with **OK**.

If the file verification fails, the Option 11C system responds with one of the following:

BKP002
Indicates a mismatch in the data file.

Corrective Action

— Compare the file again with the XVR command.

— If the verification fails again, repeat the backup or restore process, and then re-verify using the XVR command.

— Check your communications package parameters. Make sure that the parameters, such as Mode (should be set to BINARY) or Protocol (should be set to XModem), are correctly set. Another possible cause is that the communications package is stripping characters.

BKP003
Indicates that the Flash ROM in use contains invalid data and the procedure failed.

Corrective Action

— Do an EDD to update the flash ROM in use.

— Repeat the Verify procedure using the XVR command.

BKP008
Indicates that a transmission error occurred.
The procedure may have timed out or there was a problem on the telephone line such as excessive noise.

Corrective Action

— Repeat the procedure.

7 Type XSL and press the <CR> key.

This prepares the Option 11C system to perform a SYSLOAD. The Option 11C responds with CONFIRM? (Y/N).

8 Type N if you do not wish to continue, or Y if you wish to continue. Then, press the <CR> key.

If you typed **Y,** the Option 11C system responds with PSWD?.

9 Type the Option 11C system reload confirmation password and press the <CR> key.

Wait for the SYSLOAD to complete. The Option 11C system responds with various SYSLOAD related messages and DONE when it is completed.

Example:

.XSL

CONFIRM? (Y/N): Y

PSWD?:

Note: The password is not displayed when it is entered. HWR007 is displayed after the correct password is entered.

SYS000 0400 0003 0800 00
DATA FROM SYSTEM CORE EDD/UPS
DONE

10 Log in to the Option 11C system.
Type LD 2 to load overlay program 2.

LD 2 allows the time and date to be reset in the Option 11C system.

The Option 11C system responds with TFC000 and a period (.)

Example:

TFC000
.

11 Type STAD (day) (month) (year) (hour) (minute) (second).

This corrects the time and date in the Option 11C system.

Example:
.STAD 08 07 1992 15 51 30

Type TTAD to check the time and date. The Option 11C system responds with the updated time and date.

Example:

.TTAD WED 08 07 1992 15 51 32

12 Type four asterisks "**" to exit overlay program 2. Type LD 43 to load overlay program 43.**

Type EDD NBK and press <CR>.

Wait for the data dump to complete.

The configuration database in memory (RAM) is copied to the Primary Flash ROM and to the Backup Flash ROM.

13 The configuration database restore procedure is completed.

Type four asterisks "********" to exit overlay program 43. Log out of the Option 11C system by typing **LOGO**.

——————————— ***End of Procedure*** ———————————

How to restore or update the configuration database on a non-operating Option 11C

Procedure 6 describes how to transfer the configuration database from a computer disk to a non-operating Option 11C that is continuously and unsuccessfully attempting to complete a SYSLOAD or an INITIALIZE.

CAUTION

Do not attempt to perform this procedure unless the system is unsuccessfully attempting to complete a SYSLOAD or an INITIALIZE. Corruption of the Option 11C system data and complete system failure may occur if this procedure is performed under any other circumstances. The backed-up data being restored must have originated from this Option 11C system.

The configuration database is copied from the computer to the Primary Flash ROM in Option 11C systems.

Procedure 6
Restoring or updating database (system not operating)

Note: Procedure 6 requires the presence of a technician at the Option 11C system site to enable the login procedure bypass feature.

1 At the Option 11C system, enable the login procedure bypass mode.

Make a note of the existing switch settings.

Enable the override mode by setting the switches on the System Controller card located in slot 0 of the main cabinet/chassis. Set the switches to operate at 1200 or 2400 baud rate (depending on the modem or computer) as shown in Table 2.

Table 2
Override settings

Override setting for 1200 baud modem			Override setting for 2400 baud modem		
BAUD rate switch	**Switch OFF**	**Switch ON**	**BAUD rate switch**	**Switch OFF**	**Switch ON**
150	•		150	•	
300	•		300	•	
600	•		600	•	
1200		•	1200	•	
2400		•	2400		•
4800		•	4800		•
9600		•	9600		•
19200		•	19200		•

2 Access the Option 11C system using port 0 on the System Controller card.

See “Accessing remotely” on page 26 or “Accessing from on-site” on page 29.

Note: Do not perform the login procedure when the Option 11C system is in override mode. The computer accesses the Flash ROM directly.

3 Type XRT and press the <CR> key to begin to restore the configuration database.

The Option 11C system prepares to receive the configuration database file from the computer and store it on the Flash ROM.

The Option 11C system responds with WAIT - - 2 MINUTES followed by R>.

Example:

```
XRT
WAIT - - 2 MINUTES
R>
```

4 With the communications software on the computer, send the backed-up data file using XModem CRC protocol to the Option 11C system.

Refer to the manual supplied with the communications software package provided for the computer for information about sending files.

The Option 11C system displays the character **C** every 3 seconds until the file is sent. The file must be sent before the character **C** is displayed 20 times (approximately 1 minute) to avoid an Option 11C system time-out.

The data is copied from the computer disk to the Flash ROM. The Option 11C system site ID is checked against the ID contained in the configuration database record being sent. If the IDs do not match, the data will still be restored and the Option 11C system will operate but the following message will appear.

BKP011
Indicates that the Site ID in the customer data being restored does not match that of the Option 11C system being restored.

Note: The procedure completes normally. This message is only a warning.

Corrective Action

— If using this feature as an install tool, this message is normal and does not indicate an error condition. The site ID will be automatically corrected on the next data dump (EDD) and backup.

— Check the customer data file to ensure it is the correct one. You may inadvertently be restoring the wrong date file to the Option 11C system. If the data file is the correct one, contact Nortel Networks technical support.

When the file is successfully restored on the Flash ROM, the Option 11C system responds with **OK**.

If the file Restore fails, the Option 11C system responds with one of the following:

BKP004
Indicates a failure to erase either the cartridge or System Controller Flash ROM

Corrective Action

— Repeat the Restore procedure.

— If it fails again, a faulty Flash ROM is the probable cause. Replace the System Controller card.

BKP003

Indicates that the Flash ROM in use contains invalid data and the procedure failed.

Corrective Action

— Check the customer data file being transmitted to ensure that it is the correct one.

— Repeat the Restore procedure using the XRT command. If it still fails, then a corrupted customer data file is a probability.

BKP008
Indicates that a transmission error occurred.
The procedure may have timed-out or there was a problem on the telephone line such as excessive noise.

Corrective Action

— Repeat the procedure.

5 Disable the login procedure bypass mode.

Reset the switches on the front of the System Controller card to their original setting.

CAUTION
The override mode must be disabled for the Option 11C system to operate. The switches on the front of the System Controller card must be restored to their original settings.

6 Initiate an Option 11C systemreload (SYSLOAD) manually.

The Option 11C system may SYSLOAD automatically when the override mode is disabled. If it does not, initiate a SYSLOAD by setting the circuit breaker on the front of the power supply unit in the main cabinet to OFF, then to ON. The Option 11C system will SYSLOAD from the Flash ROM which was just restored. It should then operate normally.

7 **Log in to the Option 11C system Type LD 2 to load overlay program 2.**

LD 2 allows the time and date to be reset.

The Option 11C system responds with TFC000 and a period (.)

Example:

TFC000
.

8 **Type STAD (day) (month) (year) (hour) (minute) (second).**

This corrects the time and date.

Example:
.STAD 08 07 1992 15 51 30

Type **TTAD** to check the time and date. The Option 11C system responds with the updated time and date.

Example:
.TTAD WED 08 07 1992 15 51 32

9 **Type four asterisks "****" to exit overlay program 2. Type LD 43 to load overlay program 43.**
Type EDD and press <CR>.

Wait for the data dump to complete.

The configuration database in memory (RAM) is copied to the Primary Flash ROM and to the Backup Flash ROM.

10 **The configuration database restore procedure is completed.**

Type four asterisks "********" to exit overlay program 43. Log out of the Option 11C system by typing **LOGO**.

——————————— ***End of Procedure*** ———————————

Fault clearing

Introduction

This chapter describes fault indications associated with the Customer Configuration Backup and Restore (CCBR) feature and what corrective action, if any, is required.

Connection to Option 11C system is interrupted

Indicates that the procedure was interrupted.

Corrective Action

- Check the modem settings and set them correctly. Re-access the Option 11C and start over again.

  Note: The SDI port may have been disabled during the interruption. It will be automatically enabled after 5 minutes.

Connected to the Option 11C system but unable to establish communication

The SDI port is probably temporarily disabled.

Corrective Action

- Do not disconnect from the Option 11C system. The SDI port should automatically enable after approximately 5 minutes.

Unable to access overlays and an OVL005 message is displayed

The manual initialization button on the System Controller card may have accidentally been pressed while using the CCBR feature.

Corrective action

- After logging in at the TTY, issue the ENLT command.

Protocol specifications

Introduction

The protocol specifications information given in this chapter is intended to assist those who wish to create a personal communications software package that is compatible with the protocols used by the SDI port in the Option 11C system.

XModem protocol specifications

Note: Not all XModem CRC protocols are identical. Some may not operate properly with the Configuration data back-up and restore feature. Ensure that your communications package complies to the protocol specifications outlined in this chapter.

XModem transmission medium level protocol is asynchronous, 8 data bits no parity, one stop bit. It allows the sending of all types of data including binary, which is the data type used with the Customer Configuration Backup and Restore (CCBR) feature.

The following definitions apply to XModem protocol:

<soh>01H
<eot>04H
<ack>06H
<nak>15H
<C>43H

This protocol does not restrict the contents of data sent. Control characters are not processed in the 128-byte data messages (they are handled the same as other characters).

CRC protocol specifications

The Cyclic Redundancy Check (CRC) protocol is a form of block check which provides more robust error detection than the original checksum. The CRC-CCITT used by the modem protocol detects all single- and double-bit errors, all errors with an odd number of bits, all burst errors of length 16 or less, 99.97% of 17-bit error bursts, and 99.98% of 18-bit and longer bursts.

Each block of the transfer in CRC mode looks like:

<soh><blk #><255-blk #><--128 data bytes--><CRC hi><CRC lo>

in which:

<soh>= 01 hex
<blk #>= binary number, starts at 01 increments by 1, and wraps OFFH to 00H (not 01)
<255-blk #>= ones complement of blk #
<CRC hi>= byte containing the 8 hi order coefficients of the CRC
<CRC lo>= byte containing the 8 lo order coefficients of the CRC

CRC Calculation

To calculate the 16-bit CRC, the message bits are considered to be the coefficients of a polynomial. This message polynomial is first multiplied by X^{16} and then divided by the generator polynomial ($X^{16} + X^{12} + X^5 + 1$) using modulo 2 arithmetic. The remainder left after the division is the desired CRC. Since a message block in the Modem Protocol is 128 bytes or 1024 bits, the message polynomial will be to the order of X^{1023}. The hi order bit of the first byte of the message block is the coefficient of X^{1023} in the message polynomial. The lo order bit of the last byte of the message is the coefficient of X^0 in the message polynomial.

Example:

```
/* update CRC */
unsigned short
updcrc(c, crc)
register c;

register unsigned crc;
{
	register count;

	for (count=8; --count>=0;) {
		if (crc & 0x8000) {
						crc <<= 1;
						crc += (((c<<=1) & 0400)!= 0);
						crc ^= 0x1021;
		}
		else {
						crc <<= 1;
						crc += (((c<<=1) & 0400)!= 0);
		}
		}
	return crc;
}
```

A receiving program that wishes to receive in CRC mode implements the mode setting handshake by sending a <C>. After the receiver has sent the <C> it waits up to 3 seconds for the <soh> that starts the first block. If no <soh> is received within 3 seconds, the receiver will resend a <C>. After the mode has been sent by the initial <C> the protocol follows the flow shown in the following example.

Example

This flow example shows a case where the receiver requests transmission in the CRC mode and the sender supports the CRC option. The example includes various transmission errors. <xxxx> represents 2 CRC bytes.

```
SENDER                                  RECEIVER
                                <---    <C>
                                    times out after 3.4 seconds,
                                <---    <C>
                                    times out after 3.4 seconds,
                                <---    <C>
                                    times out after 3.4 seconds,
                                <---    <C>
                                    times out after 3.4 seconds,
                                <---    <C>
<soh> 01 FE -data- <xxxx>       --->
                                <---    <ack>
<soh> 02 FD -data- <xxxx>       ---> (data gets line hit)
                                <---    <nak>
<soh> 02 FD -data- <xxxx>       --->
                                <---    <ack>
<soh> 03 FC -data- <xxxx>       --->
(ack gets garbage)              <---    <ack>
                                        times out after 6.8 seconds
                                <---    <nak>
<soh> 03 FC -data- <xxxx>       --->
                                <---    <ack>
<eot>                           --->
                                <---    <ack>
```

Index

O

P

R

S

T

U

W

X

Y

Meridian 1

Option 11C and 11C Mini

Customer Configuration Backup and Restore Guide

Information is subject to change without notice. Nortel Networks reserves the right to make changes in design or components as progress in engineering and manufacturing may warrant. This equipment has been tested and found to comply with the limits for a Class A digital device pursuant to Part 15 of the FCC rules, and the radio interference regulations of Industry Canada. These limits are designed to provide reasonable protection against harmful interference when the equipment is operated in a commercial environment. This equipment generates, uses and can radiate radio frequency energy, and if not installed and used in accordance with the instruction manual, may cause harmful interference to radio communications. Operation of this equipment in a residential area is likely to cause harmful interference in which case the user will be required to correct the interference at their own expense.

Publication number: 553-3011-330
Document release: Standard 6.00
Date: April 2000
Printed in Canada

NORTEL NETWORKS
How the world shares ideas.