Back to the main page

Part 5

Expanding the installation

Part five is about adding components to an existing installation.

There are two main ways in which the MC 6501L/R System can be expanded:

- additional equipment, from a telephone to a circuit card to a fully expanded installation with two cabinets and four circuit card racks
- upgrading, or updating the software package, which will enable new functions, and facilitate the addition of newly-developed circuit cards

This section contains task summaries as reminders of installation procedures. Full details are given in the relevant sections for installation, circuit card and connector desscriptions, and programming the new equipment.

Expanding the installation

There are two main ways to expand an existing installation:

- add new equipment to increase the hardware capacity
- upgrade the software to enable new functions

Configuration back-up

Save the client configuration before and after expanding the installation.

Adding equipment to an existing installation

You can expand the system by adding equipment to both the MC 6501R and the MC 6501L. Components that may be added to an existing configuration include:

- additional cards
- expansion rack
- second cabinet
- terminals or links

Expanding the installation requires changing the system settings. Before adding new components to the system, make a back-up of the configuration.

see Part 1 for installation and connection

In this part, the procedures for adding components to an existing installation are given as task summaries.

see Appendix A for circuit cards, connectors and switch settings

When you have completed installing and programming the new components, make a second back-up to save the new system configuration.

Update the site *Programming Record* with details of the new equipment and configuration.

The equipment capacity of the PBX can be expanded in four ways:

- additional circuit card(s)
- additional rack, with slots for up to 8 circuit cards

- additional cabinet, with slots for up to 6 circuit cards
- additional rack and an additional cabinet for a maximum capacity of 28 circuit cards

Configuration equipment	Basic configuration		Expansion type		
	MC 6501R	MC 6501L	Main cabinet with additional rack	Main cabinet with additional cabinet	Main cabinet with additional rack and cabinet
main cabinet	yes	yes	yes	yes	yes
OCT3B card	yes	yes	n/a	n/a	yes
ROCT3 card	n/a	n/a	n/a	yes	yes
AC/DC power supply	specific to MC 6501R	specific to MC 6501L	specific to MC 6501L	specific to MC 6501L	specific to MC 6501L
rack 0	yes	yes	yes	yes	yes
rack 1		n/a	n/a	yes	yes
additional cabinet	n/a	n/a	n/a	yes	yes
ROCT3 card	n/a	n/a	yes	yes	yes
AC/DC power	n/a	n/a	specific to MC 6501L	specific to MC 6501L	specific to MC 6501L
rack 2	n/a	n/a	n/a	yes	yes
rack 3	n/a	n/a	n/a	n/a	yes
bus extension cable	n/a	n/a	n/a	yes	yes
battery	integrated	external	external	external	external
card slots	6	6	14	20	28
optional cards	depending on client configuration	depending on client configuration	depending on client configuration	depending on client configuration	depending on client configuration

ADS300 power supply and OCT3B card

This edition introduces two new elements:

- power supply module ADS300, which replaces ADS200
- CPU card OCT3B, which replaces OCT3

The following two procedures describe how to install and activate the ADS 300 and the OCT3B.

Note: *Part 1* of this guide details the installation and wiring of the OCT3B card. *Appendix A* details ADS300 and OCT3B characteristics.

Installing ADS300

Description

The power supply ADS300 replaces the ADS200. ADS300 with the backplane HJ2523DB01 or later, enables the following cards to be used: CC1, LD4, LT2, and MVD. This procedure describes how to replace ADS200 with an ADS300 power supply.

Steps

1. Switch off the system.

   Switch off the extension cabinet if one exist. Unplug the external back-up battery connector. Switch off the black button on the left-hand side panel of the power supply.

2 Switch off the main cabinet.

Unplug the external back-up battery connector. Switch off the black button on the left-hand side panel of the power supply.

3 Remove the OCTx or ROCT3 card from the cabinet where you will be installing the new power supply ADS300.

4 Unscrew and pull out the existing ADS200 power supply unit.

5 Change the backplane inside the cabinet where you will be installing the ADS300.

6 Insert the new ADS300 power supply unit into position and secure it with the proper screws.

7 Re-install the OCTx or ROCT3. Check that all newly-installed components are secure before replacing the cabinet cover.

8 Power on the system as described in part 1.

9 Check that the green and yellow LED, and red LED if a battery unit is installed, on the faceplate is lit.

Installing and activating an OCT3B

Description

The following procedure describes how to replace the CPU card OCT3 with OCT3B. The OCT3B card is fully compatible with the OCT3 card from version 7598 (V11.3).

Steps

See Part 1 for back-up/restore a site configuration.

1. Before substituting the cards, save the customer configuration. Switch off the MC 6501L/R.
2. Remove the main cabinet cover. Unplug the connectors from the OCT3 card.
3. Remove the OCT3 card from the cabinet. Remove the daughter cards from the OCT3, and set aside the nuts and screws.

   Note: Repack the OCT3 card inside the antistatic packing.
4. Install the daughter cards on the OCT3B card using the appropriate nuts and screws.
5. Insert the OCT3B card in the slot allocated to CPU cards in the main cabinet. Apply a small amount of pressure with both hands to push the unit straight into the backplane connector. Make sure the card clicks into place and is secure.

6 Replug the connectors on the OCT3B card. Check the location of each element.

7 Replace the cabinet cover.

8 Power on the MC 6501L/R as described in Part 1.

9 Check that the green and yellow LED, and red LED if a battery unit is installed, on the faceplate is lit.

The system starts running tests. The main menu appears on the VT 100 screen. The cards substitution has been completed successfully.

10 Restore the customer data configuration using the back-up/restore procedure described in Part 1 of this guide.

11 Unlock optional functions as required by the customer referring to the unlocking procedure described in Part 1 of this guide.

Additional cards

The purpose of adding one or more cards to the MC 6501L/R is to expand the installation capacity.

It is possible to install all types of cards in the PBX depending on the existing configuration:

Part 1 gives a detailed description of card installation and connection.

- analogue trunk cards
- digital trunk cards
- trunk cards ISDN:T2 and/or T0
- application cards
- equipment cards

Installing a card

Description

Before you install an additional card into an existing installation, first identify a suitable location in the cabinet, then set any switches if necessary.

Considerations

See the two card tables below.

- check that the card and rack/cabinet position are compatible
- ISDN/T2 cards can only take the positions 4 and 5 in rack 0; some cards may have to be moved
- LT2 or CC1 at 32IT (CCI-32 in the table) in rack 0/position 0 forbids the installation of LA8, LM8, LN8 and LD4 (LD4-4 in the table) double density

cards with a 4-input interface (with 1 or 2 ADPCM4V cards installed) in the same rack

- LD4 cards (LD4-4 in the table) used in interface with 4 DECT inputs use the time intervals of the adjacent card; this forbids the presence of a card in the next odd-numbered location except for CA1, CS1 and BTX cards

- LD4 card in position 4 accepts the installation of a card requiring a 2 Mb/s MIC junction (for example, LT2) in position 5

Note: Please read the details of configuration options in Appendix A before installing the card.

Card positions: main cabinet, rack 0

Card	0	1	2	3	4	5
CA1	yes	yes	yes	yes	yes	yes
CC1-8	yes	yes	yes	yes	yes	yes
CC1-32	yes	yes	no	no	yes	yes
CP1	yes	yes	yes	yes	yes	yes
CS1	yes	yes	yes	yes	yes	yes
LA4	yes	yes	yes	yes	yes	yes
LA8	yes	yes	yes	yes	yes	yes
LD4-2	yes	yes	yes	yes	yes	yes
LD4-4	yes	yes	no	yes	yes	no
LI1	yes	yes	yes	yes	yes	yes
LM8	yes	yes	yes	yes	yes	yes
LN4	yes	yes	yes	yes	yes	yes

LN8	yes	yes	yes	yes	yes	yes
LR4	yes	yes	yes	yes	yes	yes
LS1	yes	yes	yes	yes	yes	yes
LT2	yes	yes	no	no	yes	yes

Card positions: main cabinet, rack 1

Card	0	1	2	3	4	5	6	7
CA1	yes	yes	yes	yes	yes	no	no	no
CC1-8	yes	yes	yes	yes	yes	yes	yes	yes
CC1-32	no	no	no	no	no	no	no	no
CP1	yes	yes	yes	yes	yes	no	no	no
CS1	yes	yes	yes	yes	yes	no	no	no
LA4	yes	yes	yes	yes	yes	yes	yes	yes
LA8	yes	yes	yes	yes	yes	yes	yes	yes
LD4-2	yes	yes	yes	yes	yes	no	no	no
LD4-4	yes	no	yes	no	yes	no	no	no
LI1	no	yes	yes	yes	no	yes	yes	yes
LM8	yes	yes	yes	yes	yes	yes	yes	yes
LN4	yes	yes	yes	yes	yes	yes	yes	yes
LN8	yes	yes	yes	yes	yes	yes	yes	yes
LR4	no	yes	yes	yes	no	yes	yes	yes
LS1	no	yes	yes	yes	no	no	no	no
LT2	no	yes	no	no	no	no	no	no

Card positions: expansion cabinet, rack 2

Card	0	1	2	3	4	5
CA1	no	no	no	no	no	no
CC1-8	yes	yes	yes	yes	yes	yes
CC1-32	no	no	no	no	yes	yes
CP1	no	no	no	no	no	no
CS1	no	no	no	no	no	no
LA4	yes	yes	yes	yes	yes	yes
LA8	yes	yes	yes	yes	yes	yes
LD4-2	no	no	no	no	no	no
LD4-4	no	no	no	no	no	no
LI1	no	yes	yes	yes	yes	yes
LM8	yes	yes	yes	yes	yes	yes
LN4	yes	yes	yes	yes	yes	yes
LN8	yes	yes	yes	yes	yes	yes
LR4	no	yes	yes	yes	yes	yes
LS1	no	no	no	no	no	no
LT2	no	no	no	no	no	no

Card positions: expansion cabinet, rack 3

Card	0	1	2	3	4	5	6	7
CA1	no	no	no	no	no	no	no	no
CC1-8	yes	yes	yes	yes	yes	yes	yes	yes
CC1-32	no	no	no	no	no	no	no	no
CP1	yes	yes	yes	yes	yes	no	no	no
CS1	yes	yes	yes	yes	yes	no	no	no
LA4	yes	yes	yes	yes	yes	yes	yes	yes
LA8	yes	yes	yes	yes	yes	yes	yes	yes
LD4-2	yes	yes	yes	yes	yes	no	no	no
LD4-4	yes	no	yes	no	yes	no	no	no
LI1	no	yes	yes	yes	no	yes	yes	yes
LM8	yes	yes	yes	yes	yes	yes	yes	yes
LN4	yes	yes	yes	yes	yes	yes	yes	yes
LN8	yes	yes	yes	yes	yes	yes	yes	yes
LR4	no	yes	yes	yes	no	yes	yes	yes
LS1	no	yes	yes	yes	no	no	no	no
LT2	no	yes	no	no	no	no	no	no

Task summary

Note: Configure the card before installing it. See the *Configuration of a card* section below.

1. Switch off the MC 6501L/R.

   If two cabinets are installed, unplug the main cabinet first, then the expansion cabinet.

2. Remove the front cover of the cabinet where the card will be installed.

3. Insert the new card into the rack. Push the card along the slides until it clicks into position.

4. Connect the card to the main distribution frame (MDF).

5. Replace the front cover of the cabinet.

6. Connect the line or the set to the MDF.

7. Power on the MC 6501L/R.

8. Put the card in service.

   Go to menu 3.2 (Card management). The screen `BOARD MANAGEMENT` appears.

9. On the line with the name of the card, select the appropriate setting corresponding to the card location.

10 On the line `STATUS`, select `IN SERVICE`. Press Enter to confirm.

Note: If the card status shows `FAULT`, check:

- the card is correctly inserted
- the selected location is adequate
- the type of card selected is compatible with the card properties

11 Configure the card.
For a subscriber card, assign a DN to each set and put the set in service (menu 1.1.1 Extension characteristics).

Description of the PBX equipment

This table describes the cards declared in the menu `3.2 BOARD MANAGEMENT`:

Name of setting	Card	Card equipment
`4 AB. ANAL.`	LA4	4 analogue terminals
`4 AB. NUM`	LN4	4 digital terminals
`8 AB. ANAL.`	LA8	8 analogue terminals
`8 AB. MIX`	LM8	4 analogue terminals and 4 digital terminals
`8 AB. NUM`	LN8	8 digital terminals
`4 LR. ANAL.`	LR4	4 analogue trunk lines
`ISDN S0 S0`	LS1	2 S0 interfaces (S0 bus)
`ISDN T0 S0`	LS1	2 T0 access lines
`INTER AUTO`	LI1	2 analogue tie-lines
`CA1`	CA1	4 asynchronous V24 links
`CS1`	CS1	2 asynchronous X25 links
`LS2 ISDN T2`	LS2	T2 trunk line (32 IT)
`REDUCED LS2`	LS2	T2 trunk line (16 IT)
`LT2 ISDN T2 (32IT)`	LT2	T2 trunk line (32 IT)
`LT2 ISDN S2`	LT2	S2 trunk line (32 IT)
`LT2 ISDN T2 (24IT)`	LT2	T2 trunk line (24 IT)
`LT2 MIC (32IT)`	LT2	digital MIC trunk line (32 IT)
- Sheet 1 of 2 -		

Name of setting	Card	Card equipment
`LT2 MIC T1`	LT2	digital MIC trunk line (24 IT)
	CC1	synchronous announcements (16 minutes)
	LD4	4 ISDN interfaces (S0 or T0) or four DECT inputs
	LH8	8 analogue hotel terminals with message LED
	LR4-DT OC	4 analogue trunk lines + DTOC
	BTX	4000 ticket taxation buffer
	CP1	2 links for packet data transmission
	ADPCM 4V	LD4/LDS daughter card for 2 inputs
	LS0	1 T0 interface
	RL1	PBX routing system
	CHP1	1 parallel interface for PC
- Sheet 2 of 2 -		

Expansion of the MC 6501R

Power off

The system must be powered off before you open the cabinet.

An MC 6501R can be expanded by adding components, and/or upgrading the system to an MC 6501L.

Adding an MC 6501R expansion rack

Description

An additional rack provides up to 8 extra circuit card slots.

Considerations

- the integrated battery must be replaced with an external battery before you can add a rack to an MC 6501R cabinet

Task summary

See Part 1, Before you leave.

1. Save the site configuration.
2. Power off the installation (battery + main power).
3. Remove the front cover of the cabinet.
4. Remove the screw that secures the integrated battery in place.

5 Disconnect and remove the integrated battery from the cabinet.

6 Install the expansion rack. Secure the rack with the screws provided.

7 Insert the cards in the new rack and connect them accordingly.

8 Replace the front cover of the cabinet.

9 Reconnect the mains power supply cord.

10 Power on the installation.

11 On the programming console, launch a total reset to declare and put in service all the new cards.

12 Restore the configuration back-up and program the new components.

Upgrading an MC 6501R to a MC 6501L

Power off

The system must be powered off before you open the cabinet.

Description

An upgrade from an MC 6501R to an MC 6501L is achieved when a cabinet is added to an MC 6501R installation. Before a second cabinet can be installed, the power unit on the main cabinet must be replaced.

Considerations

To power the upgraded installation, you need:

- a specific backed-up AC/DC power supply ADS 200
- an external battery

Task summary

1. Power off the MC 6501R cabinet completely, including the battery and the main power supply.
2. Remove the front cover of the cabinet.
3. Disconnect and remove the integrated battery from the MC 6501R cabinet.
4. Disconnect and remove the backed-up AC/DC power unit from the cabinet.

5 Install and secure a new backed-up AC/DC power (specific to the MC 6501L PBX) on the cabinet.

Note: Do not switch on the backed-up AC/DC power.

6 Install the expansion rack and secure it with the screws provided.

7 Insert the circuit cards on the new rack and connect them accordingly.

8 Install and connect a new back-up battery (specific to the MC 6501L) in the cabinet.

9 Switch on the AC/DC backed-up power supply.

10 Replace the front cover of the cabinet.

To add an expansion cabinet and an expansion rack (rack 3), see *Adding an expansion cabinet*.

Expansion of the MC 6501L

An MC 6501L can be expanded by:

- adding a rack (rack 1) to the main cabinet
- adding a second cabinet (rack 2 included)
- adding a rack (rack 3) to the second cabinet

Adding an MC 6501L expansion rack

Power off

The system must be powered off before you open the cabinet.

Description

An expansion rack provides up to 8 additional card slots. A rack can be added to the main cabinet or to the expansion cabinet.

Considerations

- when a rack is added to an expansion cabinet, it is necessary to declare and put in service all the installed cards before they can function

Task summary

1. Save the site configuration.

   See Part 1, Before you leave.

2. Power off the PBX completely, including the batteries and main power supply.
3. Remove the front cover where the rack is to be installed.
4. Install the expansion rack and secure it with the screws provided.
5. Insert the circuit cards in the new rack and connect them accordingly.
6. Replace the front cover of the cabinet.
7. Power on the installation (batteries + main power).
8. On the programming console, launch a total reset to declare and put in service all the new cards.
9. Restore the configuration back-up and program the new components.

Adding a cabinet

Power off

The system must be powered off before you connect the two cabinets.

Description

The extension cabinet is delivered with a bus extension cable, a backed-up power unit and an ROCT3 bus extension card. It must be mounted on the wall within 30 cm (12 in) of the main cabinet.

Considerations

- the OCT3B card in the main cabinet must be installed with a TOCT3 daughter card for an additional switching matrix for the second cabinet

Steps

For a full description of the cabinet installation, see Part 1.

1. Unpack the extension cabinet and mount it on the wall as shown in Part 1.
2. Install the back-up battery for the extension cabinet.
3. Power off the main cabinet.
4. Remove the front cover of the main cabinet.
5. Remove the OCT3B card and install the TOCT3 card on the OCT3B card.

6 Reinsert and reconnect the OCT3B card in the main cabinet.

7 Install any additional equipment, for example circuit cards, expansion rack.

See part 1 for all installation details.

8 Replace the front covers of both cabinets.

9 Connect the bus extension cable between the main and expansion cabinet.

10 Switch on the backed-up power unit for the expansion cabinet.

11 Switch on the backed-up power unit for the main cabinet.

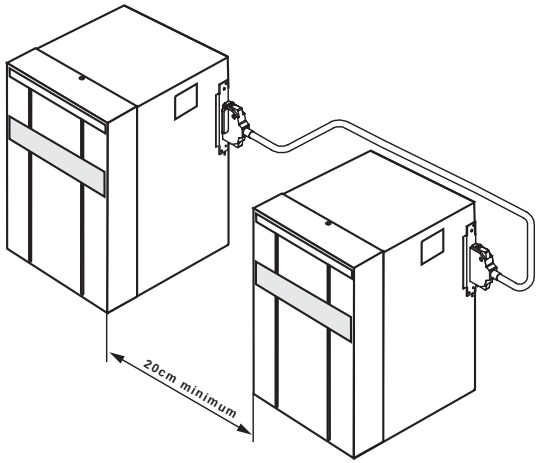

12 Connect the mains power supply for both cabinets.

13 Power on the extension cabinet.

14 Power on the main cabinet.

See parts 2 and 3 for programming options.

15 Restore the customer configuration and program the new equipment as required.

Additional data link

A data link needs an unused equipment on a circuit card. If necessary, install and wire a new circuit card.

This table shows the circuit cards which may be used to connect data terminals and to build up data links:

Circuit card	Data interface
CA1	4 asynchronous V24 interfaces
CS1	2 synchronous X25 interfaces

The link types are:

Circuit card	Type	Terminal
CA1 (V24 asynchronous)	PAD VIDEOPAD EBVO	➤ PC ➤ CONNECTED-MIB ➤ MIB-LOCAL ➤ SPTEL ➤ TY ➤ VT100 ➤ TVI-955 ➤ WYSE-65 (Minitel terminals are for France only)
CS1 (X25 synchronous)	PSDN HDLC LOCAL INTER NETWORK	

Connecting the data link

➢ *See Appendix A.*

Configure the card as required.

Declaring the data link

To declare a data link, assign an extension number, then set the link in service.

Considerations

- you need the equipment location of the card before you can configure the link

Task summary

1. Go to menu 2.1.1 (Link Characteristics). The screen `LINK SELECTION` appears.
2. On the line `BY ITS EQUIPMENT NUMBER`, enter the equipment location of the circuit card. Press Enter.
3. The system recognises the card (CA1, CS1) and demands to specify the type of link.
4. On the line `TYPE OF LINK`, select the link type. Press Enter. The screen `LINK CHARACTERISTICS` appears.
5. On the line `STATUS`, select `IN SERVICE`. Press Enter. The line changes to `IN SERVICE`.

The connected data link or terminal is operational as soon as the status is `IN SERVICE`.

Additional trunk lines

When a PBX is expanded, new extensions may saturate the traffic on existing trunk lines. To avoid saturation, additional trunk lines may be added.

The tasks to add a new trunk line are:

- connecting a trunk line
- declaring the trunk group

Connecting a trunk line

Adding a new extension requires unused equipment on a circuit card. If necessary, install and wire a new circuit card.

Available trunk line circuit cards are:

Trunk line	Circuit card
analogue trunk line	LR4
analogue private line and tie-line	LI1
ISDN S0 trunk line	LS1
ISDN T2 trunk line	LT2
Private or rented line (MIC)	LT2

Description of trunk lines

This table shows the trunk line and corresponding trunk group types, as shown in the PBX menu:

Trunk line	Trunk group	Default name
MIC digital trunk line	`DIGITAL TRK`	
analogue trunk line	`ANALOG TRK`	`TG.LR1`
tie-line	`TIE-LINE`	`TG.IA1`
ISDN:S0 trunk line	`ISDN:T0`	`TG.LS1`
ISDN:T2 trunk line	`ISDN:T2`	`TG.LS2`

Adding a trunk to an existing trunk group

A trunk line has to be assigned to a trunk group of the same type. This group may already exist or it will have to be created.

Considerations

- a trunk line cannot be assigned to a trunk group of a different type
- the two B-channels on an ISDN T0 interface may be assigned to individual T0 trunk groups by selecting either `TRUNK GROUP 1ST B CHANNEL` or `TRUNK GROUP 2ND B CHANNEL`

Task summary

1. Go to menu 1.2.4 (Trunk Characteristics) and select the location of the circuit card.

2 On the line `TRUNK GROUP`, select the existing trunk group. Press Enter.

3 On the line `STATUS DISABLED`, select `IN SERVICE`. Press Enter.

The trunk line is now assigned to an existing trunk group and can be used immediately.

Adding a trunk line to a new trunk group

The trunk line is assigned to a new trunk group which has to be routed.

1 Go to menu 1.2.1 (Trunk group names). The screen `TRUNK GROUP NAMES` appears.

2 On a unused line `NAME`, enter a unique name for the new trunk group.

3 Go to menu 1.2.3 (Trunk group characteristics). The screen `TRUNK GROUP SELECTION` appears.

4 Select the new trunk group. Press Enter. The screen `CHARACTERISTICS OF TRUNK GROUP <NAME>` appears.

5 On the line `PHYSICAL TYPE`, select the type of trunk line. Press Enter.

See Part 2 for trunk route details.

6 Modify the trunk characteristics as required and define the routing for the new group.

Additional sets

Adding a set requires unused equipment on a circuit card. If necessary, install and connect a new circuit card.

This table shows the circuit cards for analogue and digital sets:

Terminal or set	Circuit card
analogue set (phone, fax machine, answering machine, modem)	LA4 (4 analogue sets) LA8 (8 analogue sets) LM4 (2 analogue and 2 digital sets) LM8 (4 analogue and 4 digital sets)
digital sets	LN4 (4 digital sets) LN8 (8 digital sets) LM4 (2 analogue and 2 digital sets) LM8 (4 analogue and 4 digital sets) ROCT3 (16 digital sets) OCT3B (4 digital sets - keep these lines as back-up.)

When connecting an additional set to a circuit card, check:

- the card is installed correctly
- the card has been declared and the status set to `IN SERVICE` (menu 3.2 Board management)

The tasks to add a new set are:

- connecting the set
- declaring the set

Connecting the set

Connect an analogue or a digital phone set as shown in Part 1.

CAUTION
Power off before installing and wiring a new card

Short circuits during wiring may damage the circuit cards of the system.

Declaring the set

To put the set into operation, assign an extension number and put the extension in service. Modify the extension characteristics as required.

Task summary

1. Go to menu 1.1.1 (Extensions Characteristics). The screen `EXTENSION SELECTION` appears.
2. On the line `BY ITS EQUIPMENT NUMBER`, enter the equipment location. Press Enter. The screen `CHARACTERISTICS OF <LOCATION> <TYPE>` appears.
3. On the line `SUBSCR. STATUS`, select `IN SERVICE`. Press Enter.

Software upgrade

CAUTION
No communication through the PBX is possible during software loading

While the software is upgraded, no local or external communications are possible during the process.

Software upgrades, or updates, add new functions to the configuration and can also enable the inclusion of newly-developed circuit cards that can be installed in the PBX.

Software for an MC 6500 PBX is loaded and tested initially by the manufacturer. Updating is performed when the software has evolved.

Upgrading the software is performed by linking a PC to the parallel port of the PBX. Data transfer is secured by the XMODEM protocol.

Loading the software can be carried out in two ways:

- loading on site
- downloading through the ISDN network

Upgrade on site

Configuration back-up

Before any update of the PBX, back-up the client configuration

New software can be loaded on a portable PC before arrival on site. It is then transferred onto the PBX on site.

Considerations

On site, the following equipment is required:

- CHP1 card: parallel loading card; this card will use one of the appropriate locations during the first part of the update
- a PC X86 or Pentium for update tools management with:
  - a hard drive
  - a 3 1/2” disk drive
  - DOS or Windows operating system
  - a parallel port (input/output connector)
- a DB-25 point cable, maximum 3 m (3 ft 3 in) long, to link the PC and the CPH1 card
- a VT 100 or PC terminal with a VT 100 emulation
- a 25 (or 9) point cable; to link the VT 100 or PC to the serial communication port of the PBX
- software update kit

Upgrading the PBX software

Description

This section describes how to update new versions of the PBX software.

The full PBX software package has four parts:

- DOS tools for the download and transfer programming
- System software, which initialises and configures the cards
- Application software, that offers all the functions of the PBX configuration and setting programs
- Export additions, for individual country requirements

Considerations

- on-site equipment as listed above
- it is possible to update only the version 1 of the software, not version 2
- the system software evolution does not depend on the application evolution, but system and application software are not always compatible
- the order of the programming steps depends on the type of update to be done

Programming steps

1 Save the customer configuration.

This operation is performed on-line. There is no system auto reset, and ongoing communications are not interrupted.

See Part 1 Chapter 6 for the back-up procedure

2 If necessary, load the system software.

- system software must be compatible with the application software installed or to be installed
- check the system software version in menu 5.4.1

See Part 6 for System software installation on the PC and loading on site

See Part 6 for Application software installation on the PC and loading on site

3 If necessary, load the application software.

- application software must be compatible with the system software installed or to be installed.
- check the application software version in menu 5.4.1

4 Install VUs on the PC.

On a PC running Windows:

- Open a MSDOS window
- Go to the C :\OUTIPIC directory
- Type `MENU` and press Enter. On screen, the window `TOOL SELECTION` appears.
- In the window `TOOL SELECTION`, select the line `VU INSTALLATION ON PC`.

- Press Enter. The screen `VU INSTALLATION ON DISK` appears.
- Put the software disk in drive A: and press Enter twice.

5 The default installation directory is C :\vu_F1. If this is suitable, press Enter to validate.

All the disks which can be transferred are displayed on screen.

- When the message `SELECT DISKS TO TRANSFER` appears on the screen, select UPD with the arrow keys. Press the INSert key on the PC to validate the disk selection. Press Enter.
- When the message `CONFIRM SETTINGS?` appears, press Enter. The message `TRANSFER IN PROGRESS!!!` appears.
- When the message `INSERT DISK <DISK NAME>` appears, remove the Order disk and insert the first disk to transfer. Press Enter. `THE INSERT DISK <DISK NAME>` message appears for each disk to transfer.
- The message `INSTALLATION DONE!!` announces that the disk transfer is complete. Press Esc to go back to the screen `TOOL SELECTION`. Remove the disk to transfer.

It is recommended to continue with Step 5 of the procedure “Passing VUs” without quitting the “DOS Tools” program.

6 Transferring VUs.

On the PC running Windows:

Note: If the screen `TOOL SELECTION` is already displayed, skip the first 3 operations.

- Open a MSDOS window
- Go to the C :\OUTIPIC directory.
- Type `MENU` and press Enter. The window `TOOL SELECTION` appears.
- In the window `TOOL SELECTION`, select the line `PASSING VUS`.
- Insert the Order disk. Press Enter. The screen `CLIENT CONFIGURATION UPDATE` appears.
- In the screen `CLIENT CONFIGURATION UPDATE`, enter the path and name of client configuration file (starting configuration which should be on the hard disk). On the line `STARTING CONFIGURATION`, enter the fields `PATH` and `NAME`.
- In the screen `CLIENT CONFIGURATION UPDATE`, enter the path and name of the target configuration file. On the line `TARGET CONFIGURATION`, enter the fields `PATH` and `NAME`.
- When installation is complete, press Esc to go back to the menu `TOOL SELECTION`.

Note: The new client configuration file has to be

restored in the PBX menu 5.2.

7 Perform the parallel restoration of the site configuration.

The configuration restoration is performed off line. The system is stopped during the process and performs an auto reset. Ongoing communications are interrupted.

See Part 1, "Saving office data using a serial back-up" on page 195

- reset the PBX
- press Esc to quit the “DOS tools” program

See Part 6 "DOS® tools" on page 681

Downloading with the ISDN network

Configuration of the download with an ISDN access

Description

Updates the application software while keeping the client configuration data. Downloading is a set of exchanges between the MC Tools Upgrade application, installed on the remote server, and the PBX. A PC connected to the PSDN with a ISDN_T interface plays the role of the remote server.

Note: The download is always performed upon demand of the remote server.

The download comprises 5 steps:

1. Transfer to the remote server of the site configuration data.
2. Formatting of the data received by the server.
3. Constitution by the server of a software package including new application and appropriate site configuration data.
4. Transfer of the software package towards the site. This operation consists of downloading the software package in the memory of the MOCT3 daughter card and defining the time at which the updating will take place.

5 At the programmed time, the system automatically restarts by transferring the software package from the memory of the daughter card to the memory of the central processing unit. After this operation, the system is reset in order to take into account the new application.

Considerations

Downloading requires the following hardware configuration:

- the MOCT3 card, daughter card equipped with 6 MB of memory, to store the transferred files
- the CP1 card with the gateway function to transfer X25 packets in the B canal
- the ISDN trunk card (LSx, LD4 or LT2)
- the configuration of the X25 settings on the PBX side is the same as the default configuration of the remote identifier IDENT_0.

Programming steps

1 Check that the client installation is equipped with an MOCT3 and CP1 card as well as an ISDN trunk card.

2 Declare a T0 or T2 access.

3 Assign a local extension number to the circuit/packet coupler.

Go to the menu 1.3.1.2.1 (Access to features). The screen `ACCESS TO FEATURES` appears.

4 On the line `CALL CIRCUIT PACKET COUPLER`, enter a DID number.

5 Assign a DID number to the packet switch. Go to the menu 1.3.2.4 (General call DID numbers). The screen `GENERAL CALL DID NUMBERS` appears.

6 On the `DESCRIPTION NUMBER TO MODIFY` line, enter the number corresponding to the rank of the DID number in the list displayed.

7 On the line `NUMBER RECEIVED`, enter the DID number that the remote user will call for the equipment update.

8 On the line `ROUTING`, select `COM. PACKETS`.

9 Put a CP1 link in service.

Go to menu 2.1.1 (Link characteristics). The screen `LINK SELECTION` appears.

10 On the line `BY PHYSICAL LOCATION`, enter the equipment number of a circuit on the CP1 card. Press Enter.

11 The screen `LINK COUPLER <EQUIPMENT NUMBER>` appears, and the link type line displays `CP1`. Press Enter.

12 On the line `NAME`, name the CP1 link.

13 On the line `EXTENSION NUMBER`, enter an extension number within the data numbering plan, for example 022.

14 On the line `CATEGORY`, select the default category `CATEG_1`.

15 On the line `STATUS OPERATOR`, select `IN SERVICE`. Press Enter.

16 Go to menu 4.6.3 (Data link status) to check that the CP1 link is created and that the SRVRHM (017) and ERF (020) servers have the FREE status.

For the download procedure, consult the documentation concerning the 7415: MCTools Upgrade application.